AKD's VHF/UHF Wavemeter WA1

From: G8MNY@GB7CIP.#32.GBR.EU
To : TECH@WW

By G8MNY (New May 05)

Here is s reverse engineered diagram of one I picked up the other day.

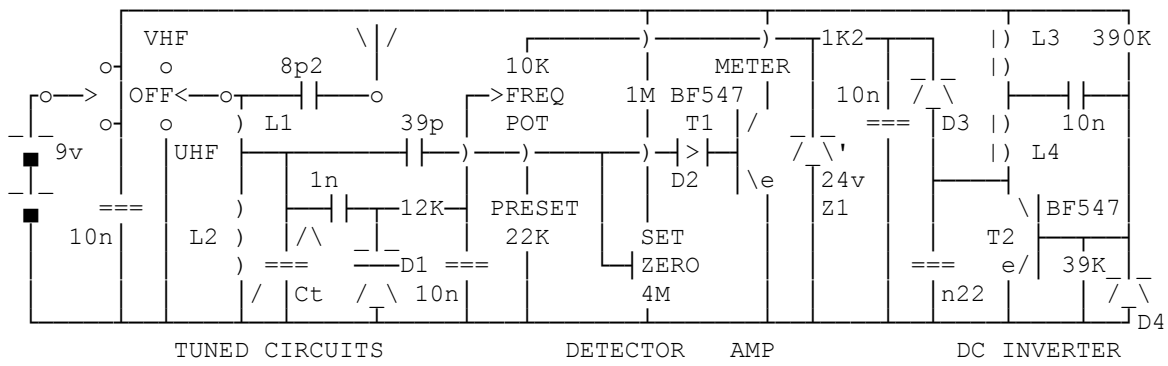

L1 = 2T 23mm dia, L2 = 4T 7mm dia, L3 & L4 1mH ?

HOW IT WORKS
When switched to VHF/UHF the DC inverter T2 D4 & D3 is powered. It oscillates to provide >24V, which is fed to the 24V zener Z1 to make the maximum varicap D1 tuning voltage.

In VHF mode at max tuning voltage L2 & Ct set the highest frequency of 200MHz. The lowest frequency or 120MHz is determined by the voltage set by the preset.

On UHF mode L1 is placed across L2 to raise the frequency between 195 to 450MHz, & the slight inductance of the ground track gives the low Z aerial coupling needed @ UHF.

The RF detector diode D2 feeds the base of T1 to current amplify the signal for the meter. The 4M pot sets the bias level to set meter Zero so that D2 & T1 are at the point of conduction.

Why Don't U send an interesting bulletin?

73 de John G8MNY @ GB7CIP